Specification Sheet

XG+ 660

FTT 6x4 Prime Mover



ENGINE
Power: PX-15 660 (485 kW / 660 hp) Torque: 3200 Nm / 2360 lb/ft

GVM	GCM
28,000 kg	97,000 kg

Max. front 7,100 kg
Max. rear 20,900 kg

XG+ 660

FTT 6x4 Prime Mover

CAB EXTERIOR

- Cab length: 2690mm; cab width: 2550mm, interior standing room 2170mm
- Number of cab entrance steps: 3
- LED headlights, daytime running lights, cornering & fog lights
- Skylights
- Hazard beacons on cab front, prepared
- Two LED work lamps for cab rear wall
- External sun visor
- Mechanical cab suspension
- Twin 220 litres external tool boxes, left hand side sealed, right hand side internal and external accessibility

CAB INTERIOR

- Cab interior trim colour: Exclusive
- Cab interior decoration: Natura
- Steering wheel — Leather Exclusive
- Driver seat: Xtra Leather air suspended, left & right armrests
- Passenger seat: Xtra Leather air suspended, left & right armrests
- Dashboard table
- Storage compartment (13 litres) with drawer in centre (10 litres)
- Dual Bunk (upper and lower)
- Automatic Cab Climate Control
- Roof hatch, electric control
- Two refrigerators
- DAF Relax Bed — Including Mattress with topper
- 3 overhead storage lockers, 273 litres combined storage
- Wireless charger
- 4 USB ports

COLOURS

- Cab colour Crystal White
- Chassis colour black

Optional

- Various cab colour range
- Various chassis colour range

SAFETY & SECURITY

- Lane Departure Warning System
- Vehicle Stability Control (VSC)
- Engine Immobiliser System
- Air bag (driver) and 2 seat belt tensioners
- Adaptive Cruise Control with Frontal Collision Warning
- Advanced Emergency Braking System
- Reverse Warning Alarm
- Programmed Cab Displacement
- DAF corner view camera — 285 degree wide view

COMMUNICATION & DRIVING MANAGEMENT

- 12.3” digital driver display
- DAF infotainment system: 10.1” display with FM/DAB+, Apple Car Play and Android Auto phone mirroring; exclusive speakers with 8 speakers including 10” sub-woofer
- Paccar Connect with 12 months included telematics subscription

DRIVELINE

- Engine: PX-15, 6 cylinder diesel engine, 14.5 litres
- Output 485kW (660hp) at 1800rpm
- Maximum torque 3200Nm at 900-1400rpm
- Exhaust emission Euro 6
- Gearbox: 16-Speed TraXon 16TX3240TO
- Gearbox ratio 14.68-0.82
- Rear axle ratio 3.42
- Mechanical diff lock and Cross lock
- ASR (anti-slip regulation)

SUSPENSION & AXLES

- Front: 7.5t, Parabolic Leaf spring, DAF 165N steer axle
- Rear: 20.90t, Electronically Controlled Air Suspension (Airglide 460), Meritor MT21-165 drive axles
- Axle load monitoring

WHEELS & TYRES

Front axle: 315/70R22.5

Driven axle(s): 11R22.5

XG+ 660

FTT 6x4 Prime Mover

CHASSIS

- Wheelbase 3.90m / rear overhang 1.37m
- Side member height 310mm
- Fuel tanks 725 litres + 425 litres
- AdBlue® Tank 130 litres
- Front Underrun Protection (FUP)
- Walkplate
- Rear mudguards with spray suppression
- Work lamp LED
- Rear of cab grab handles

ELECTRICAL POWER SUPPLY

- Batteries 2 x 210Ah AGM
- Alternator 150A
- Main switch with second control in cab
- Main switch battery disconnect

AERODYNAMICS

- Adjustable roof air deflector
- Side collars

AIR INTAKE

Cyclonic air intake high behind cab

BRAKE SYSTEM

- PX Engine Brake
- Ventilated disc brakes front and rear
- Dual circuit air system with electronic control (EBS)
- Electronic park brake
- Low speed trailer brake

DRAWBAR & TRAILER EQUIPMENT

- Pneumatic trailer connection
- Hosetenna
- 1x7 pin detachable EBS cable
- 1x7 pin detatchable trailer lighting cable
- Power distribution box for multi trailer combinations

Optional

- Jost JSK 37 CZ-185/MP0118 (D-value 190kN)
- Jost JSK 37 CZW-185/MP0118 (D-value 190kN)
- Jost JSK 37 CZ-185/MP4111-350 (D-value 190kN)
- Jost JSK 37 CZW-185/MP4111-350 (D-value 190kN)

GVM / GCM

Max GVM 28,000kg

Max GCM 97,000kg

WARRANTY

3 year / 750,000km complete vehicle warranty

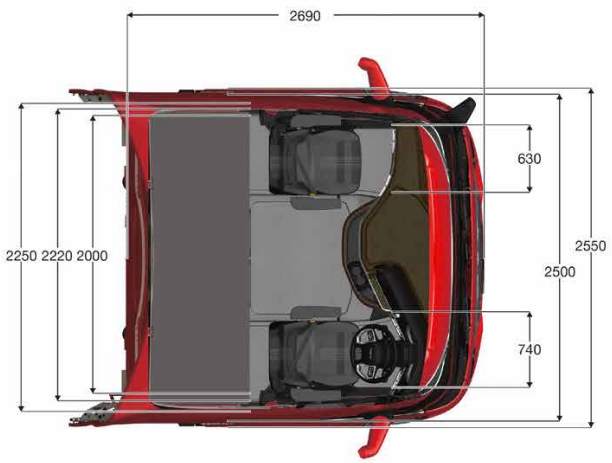

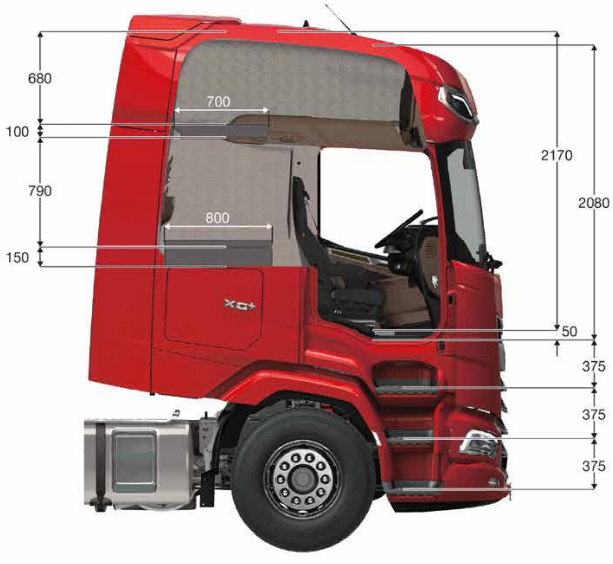

XG+ 660

FTT 6x4 Prime Mover

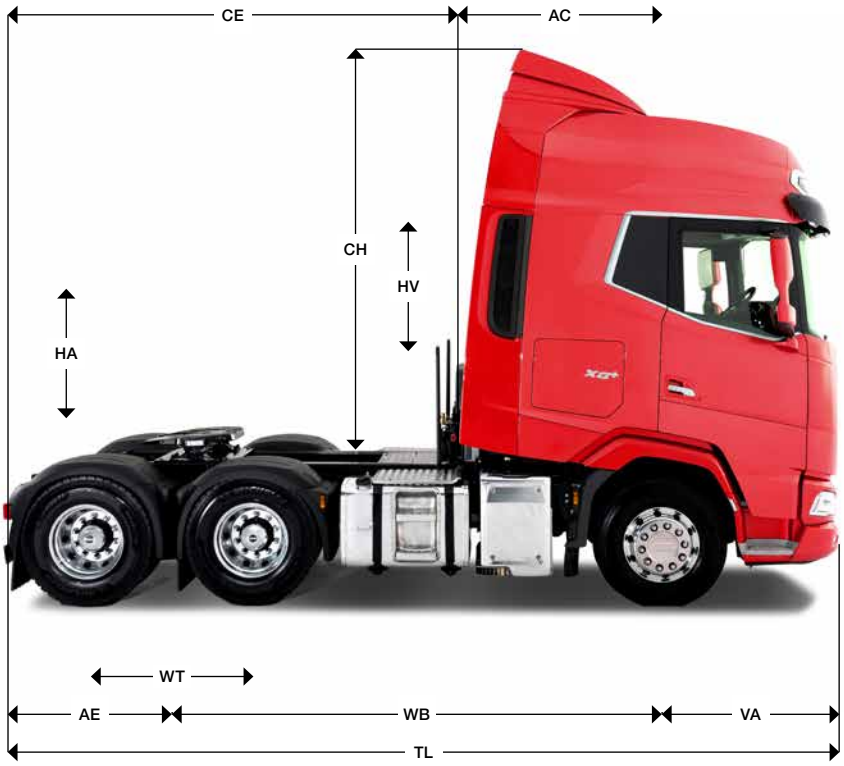



	Wheelbase — AE		Unladen Weight [1]		
	WB	AE	Front	Rear	Total
XG+	3.9	1.37	5,290	3,400	8,690

	Dimensions										
	AC	CE	CH[2]	TL	HA[3]	HA[4]	VA	WT	HV[5]	RB	SB
XG+	1.16	4.11	2.89	6.8	1.11	1.07	1.53	1.32	0.96	0.79	1.88

1. Chassis and cab weight calculated with: Standard specification items only, less fuel, AdBlue and driver, tolerance ± 3%. Changing of the specification can have major impact on vehicle weight.
2. Cab height is measured from frame member to closed cabin roof hatch.
3. Unladen height at centre of driven axle(s)
4. Laden height at centre of driven axle(s)
5. Unladen height at centre of front axle(s)

Note: All dimensions are in metres (m) and weights in kilograms (kg)
Fifth-wheel shown for illustrative purposes only

XG-FTT-SS-0423

No rights can be derived from this publication. DAF Trucks Australia reserves the right to change product specifications without prior notice. Products and services comply with the European Directives effective at the time of sale but may vary depending on the country in which you are located. For the most recent information, contact your authorised DAF dealer.

DAF Trucks Australia
66 Canterbury Road
Bayswater VIC 3153
Phone (03) 9721 1500